TX

Wood Chip and Pellet Boilers

TX

Awarded the Ecolabel!

www.froeling.com

Heating with wood chips and pellets

For more than 50 years, Froling has specialised in the efficient use of wood as a source of energy. Today the name Froling stands for modern biomass heating technology. Froling firewood, wood chip and pellet boilers are successfully in operation all over Europe. All of our products are manufactured in our factories in Austria and Germany. Froling's extensive service network ensures that we can handle all inquires quickly.

Fuels: wood chips and pellets

Wood chips are a local and environmentally-friendly fuel, which is not subject to the crises and fluctuations of the market. Furthermore, wood chip production provides jobs for local residents. Therefore wood chips are the perfect fuel, not just economically, but also from an ecological standpoint. Leftover branches and treetops and sawmill waste are shredded into wood chips. The quality class is determined by the wood used.

Wood pellets are made of natural wood. The large volumes of wood shavings and sawdust generated by the wood-processing industry are compacted and pelleted without being treated beforehand. Pellets have a high energy output and are easy to deliver and store. These are just some of the advantages that make pellets the perfect fuel for fully automatic heating systems. Pellets are delivered by tanker and unloaded directly into your store.

The new Froling TX

Convenient, long-lasting, economical and safe: The TX boiler from Froling meets all your needs.

This boiler is suitable for burning both wood chips and pellets thanks to its fully automatic smart operating system.

Due to the well-planned and compact design the boiler needs very little space. Froling also offers a wide range of fuel feeder systems for almost all requirements. The tried-and-tested engineering systems ensure an optimum energy consumption.

High demands - smart solutions

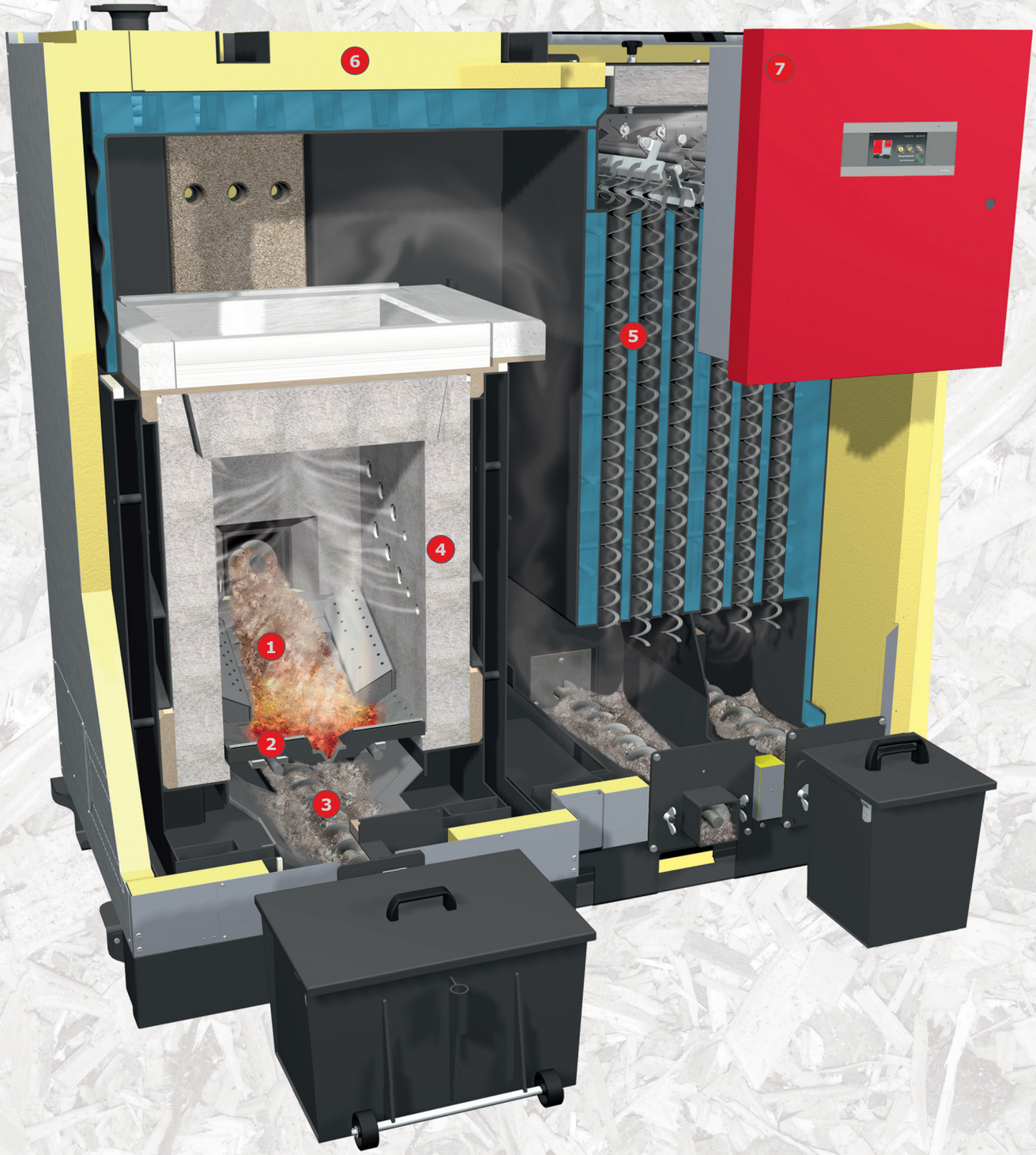

Highlights:

1. Ventilated step grate for pre-drying of materials and optimum combustion.
2. Tilted combustion grate to ensure full burn-out and grate cleaning during operation.
3. Heat-resistant ash removal screw between combustion chamber and ash can.
4. Top quality high-temperature combustion chamber with firebrick lining for very low emissions and an effective combustion at a high efficiency.
5. Vertical 4-pass tubular heat exchanger with Efficiency Optimisation System (EOS) and with automatically actuated turbulators to clean the flue gas path in the boiler.
6. Fully insulated to minimize radiant heat loss.
7. H 3200 control system installed ready to plug in.

A well-designed inside

Feature: **ventilated step grate**

Advantages:
- pre-drying of fuel
- ideal combustion conditions

The ventilated step grate helps to pre-dry the fuel, ensuring an optimum combustion of wood chips or pellets. The step grate distributes the fuel evenly in the combustion zone, which creates ideal combustion conditions.

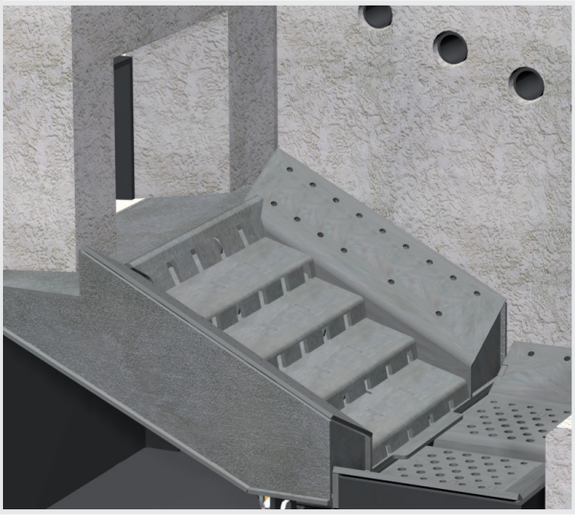

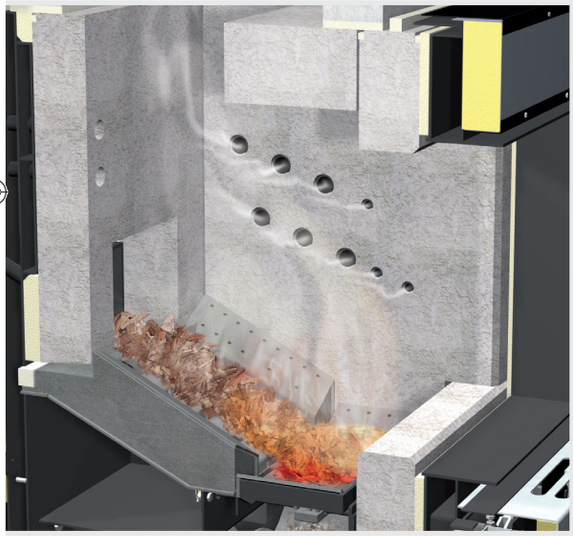

Feature: **high-temperature fireclay-lined combustion chamber**

Advantages:
- optimum emission values
- economical fuel consumption

The combustion chamber provides optimal burning conditions as its made of high quality heat resistant fireclay components. The boiler is designed to burn both dry and moderately damp fuels. The optimum burn-out of the fuel minimises emissions and ensures effective combustion at a high efficiency.

Feature: **automatic tipping grate**

Advantages:
- automatic self-cleaning
- economical fuel consumption
- automatic ignition using residual embers

The tipping grate can pivot through 90°, and reliably cleans ash and residue from the combustion chamber. This grate is made of a special fire-proof alloy to guarantee a long service life.
The system does not have to be shut down for cleaning and no further ignition is required.

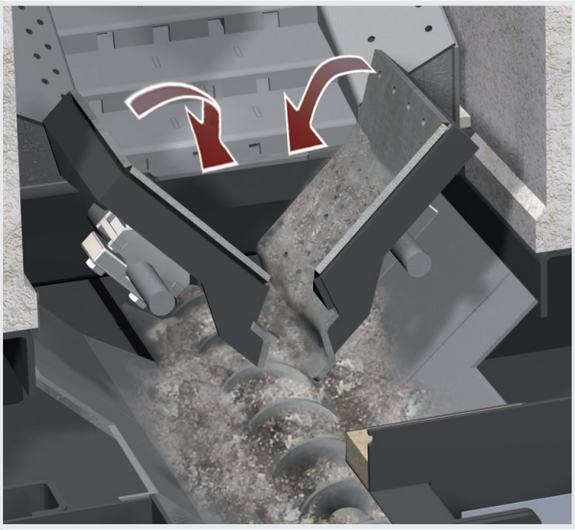

Feature: **vertical 4-pass heat exchanger with automatic cleaning (EOS)**

Advantages:
- high efficiency
- automatic cleaning of heating surfaces

The 4-pass design of the heat exchanger directs the path of the flue gases multiple times inside the boiler, ensuring efficient ash separation. The design also supports dust separation. The EOS (Efficiency Optimisation System), which comes as standard, consists of special turbulators, which are placed in the heat exchanger pipes and allow automatic cleaning of the heating surfaces. An additional benefit: clean heating surfaces ensure a higher efficiency and fuel savings.

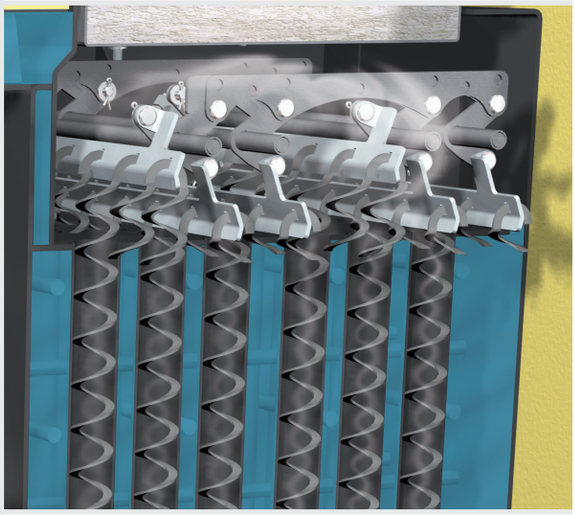

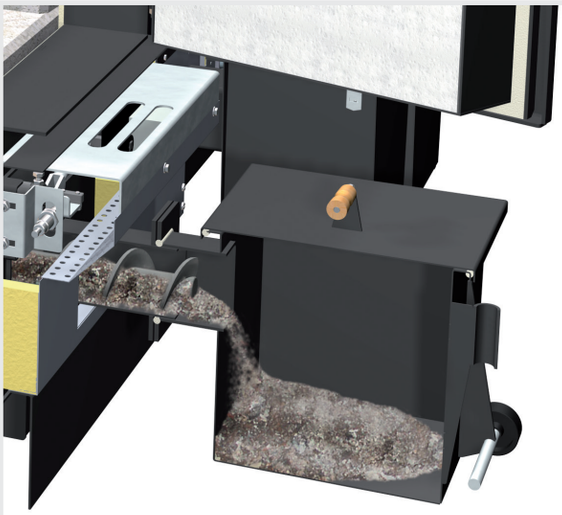

Feature: **Easy to clean**

Advantages:
- automatic ash removal
- simple emptying of the ash container

The ash accumulated in the combustion chamber and the heat exchanger during combustion is automatically fed into the ash container. Handling is made simple due to transport wheels and holding bar. An additional cover ensures no ash can fall out of the container during transport.

Feature: **flue gas recirculation (FGR) (optional)**

Advantages:
- optimised combustion
- very low emissions

The flue gas recirculation (FGR) system mixes part of the flue gas with the combustion air and returns it to the combustion zone. This ensures exceptionally high efficiency. At the same time, flue gas recirculation (FGR) helps to improve combustion and performance. In addition, it reduces NOx emissions and helps to protect the fireclay lining when high-quality dry fuels are used.

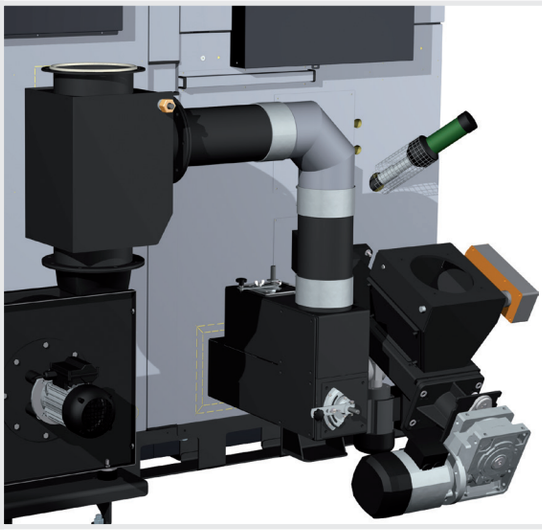

Convenience with maximum safety

1. Sturdy agitator head (spring blade or articulated arm)
2. Maintenance-free agitator gearbox.
3. Strong spring piles ensure even filling of the feed screw.
4. Screw channel with progressive screw blade for smooth operation.
5. Ball joint for continuously adjustable inclination of the discharge screw to the stoker unit.
6. Burn-back flap or patented twin-chamber rotary valve for outstanding burn-back protection.
7. Sturdy stoker screw for reliable fuel feed with automatic turn control.
8. Energy-saving spur gears.
9. Temperature monitoring device in the fuel store (only required in Austria).
10. Easy access to the shear edge through an accessible opening.
11. Monitored drop box cover.

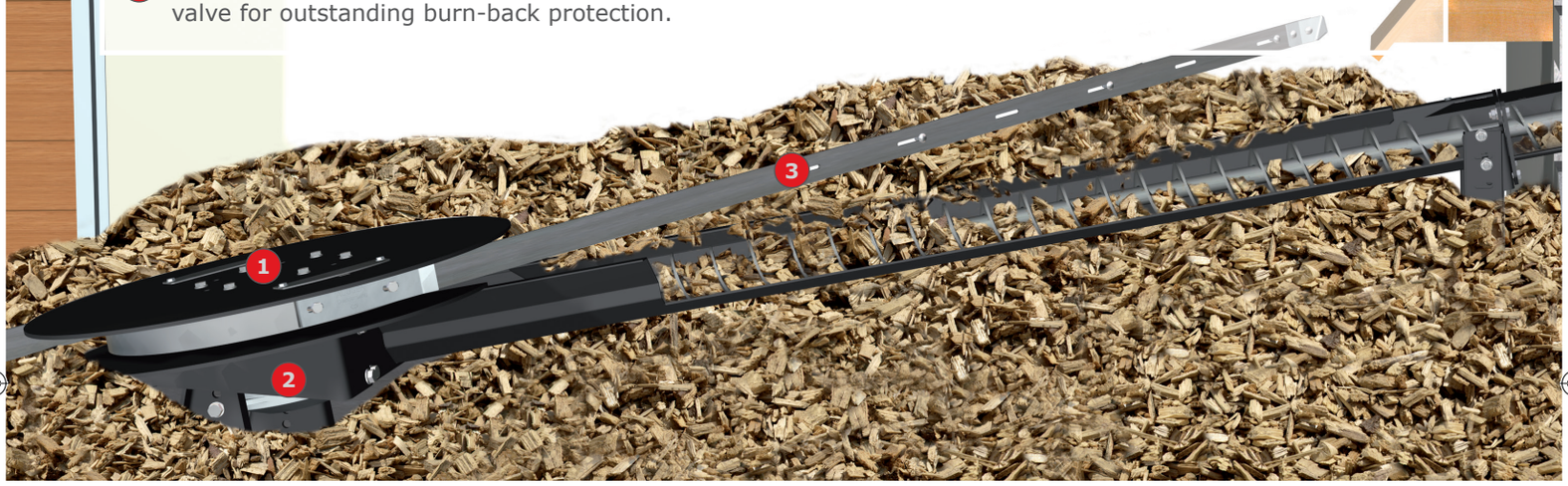

Feature: **flexible ball joint and maximum burn-back protection**

Advantages:
- flexible set-up
- reliable fuel transport
- top burn-back protection

The ball joint is a flexible connecting piece between the discharge screw and the stoker unit. Offering continuous adjustment of the inclinations (up to max. 15°) and angles, the ball joint enables an optimum adjustment to the space requirements. The TX's stoker unit reliably feeds wood chips up to P45A (previously: G50) and pellets into the combustion zone.

The burn-back protection system (burn-back flap for wood chips or rotary valve for wood chips and pellets) reliably separates the discharge system and the feed unit, providing optimal burn-back protection. The decision whether to use a burn-back flap or rotary valve is made when the boiler is adjusted to your heating system in the project phase. The most appropriate protection system will always be chosen.

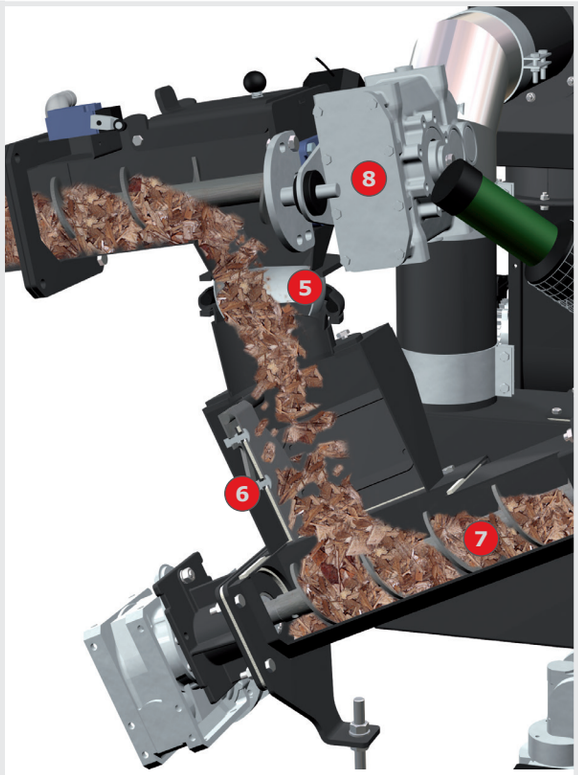

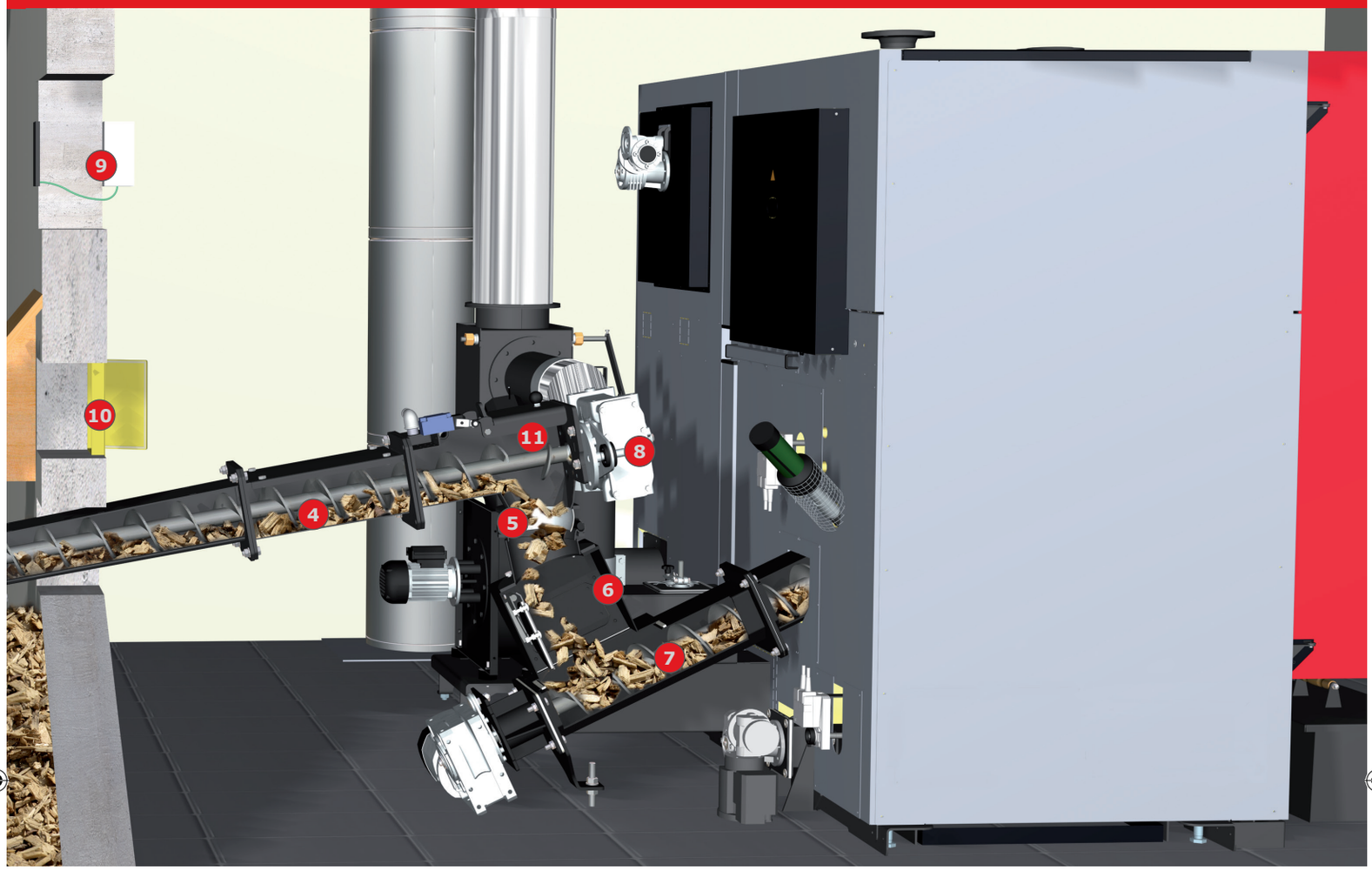

Feature: **patented twin-chamber rotary valve**

Advantages:
- continuous flow of material
- top burn-back protection
- suitable for wood chips up to P45A (previously G50) or pellets

The patented twin-chamber rotary valve offers maximum operating safety. The advanced system design with two spacious chambers ensures that the fuel is transported continuously to the combustion zone. This optimal fuel metering ensures the best possible combustion values.

The two large chambers are especially suitable for transporting wood chips up to P45A (previously G50). The high-quality cutting edges can be replaced and also easily cut through coarser pieces of fuel. Froling offers the rotary valve in two sizes (type I for pellets and type II for wood chips up to P45A), providing the ideal solution for all requirements.

6

Froling discharge systems

Spring blade agitator (SBA)

Suitable for discharge of wood chips from bunkers with a maximum working diameter of 5 metres. The system is maintenance-free and especially designed for easily pourable fuels (wood chips P16A/P45A to M35 previously G30/G50 to W35). The simple and effective design of the feed system ensures smooth operation. Any problematic materials (e.g. foreign bodies) in the fuel are automatically detected and removed by a reverse turn of the screws (turn control). The feed screw (diameter 150 mm) with progressive pitch guarantees low energy consumption.

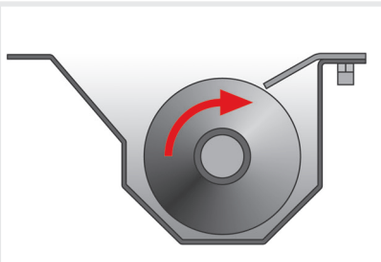

Screw channel

The special trapezoidal shape of the channel ensures that fuel transport runs smoothly. The system is easy to operate so it saves energy even when feeding in the maximum amount of pellets.

Shear edge

The sturdy shear plate breaks up large pieces of fuel, guaranteeing continuous fuel feed.

Spring blades

The strong spring packs ensure that the feed screw has an even filling level. During the filling process, the springs are folded underneath the cover plate. When fuel is withdrawn, the spring blades return to ensure reliable fuel feed.

Torsion arm agitator (TAA)

For discharge of wood chips from bunkers with a maximum working diameter of 6 metres. The system is low-maintenance and is especially designed for fuels with increased discharged output due to their limited ability to flow. The patented design guarantees quiet and effective operation. Any problematic materials (e.g. foreign bodies) in the fuel are automatically detected and removed by a reverse turn of the screws (turn control). The feed screw (diameter 150 mm) with progressive screw blade ensures low energy consumption.

Torsion spring joint

The joints are strengthened with torsion springs. The spring pre-tension can be set at three levels. As a result, the joints can be adjusted optimally to the current conditions.

Articulated arms

The two sturdy articulated arms ensure reliable fuel transport. The strong vibration dampers help to reduce noise.

Tearing hooks

The robust tearing hooks loosen the fuel and ensure the store empties.

Other discharge systems are available upon request (e.g. sliding floor, etc.).

Bunker filling systems

Vertical feed screw

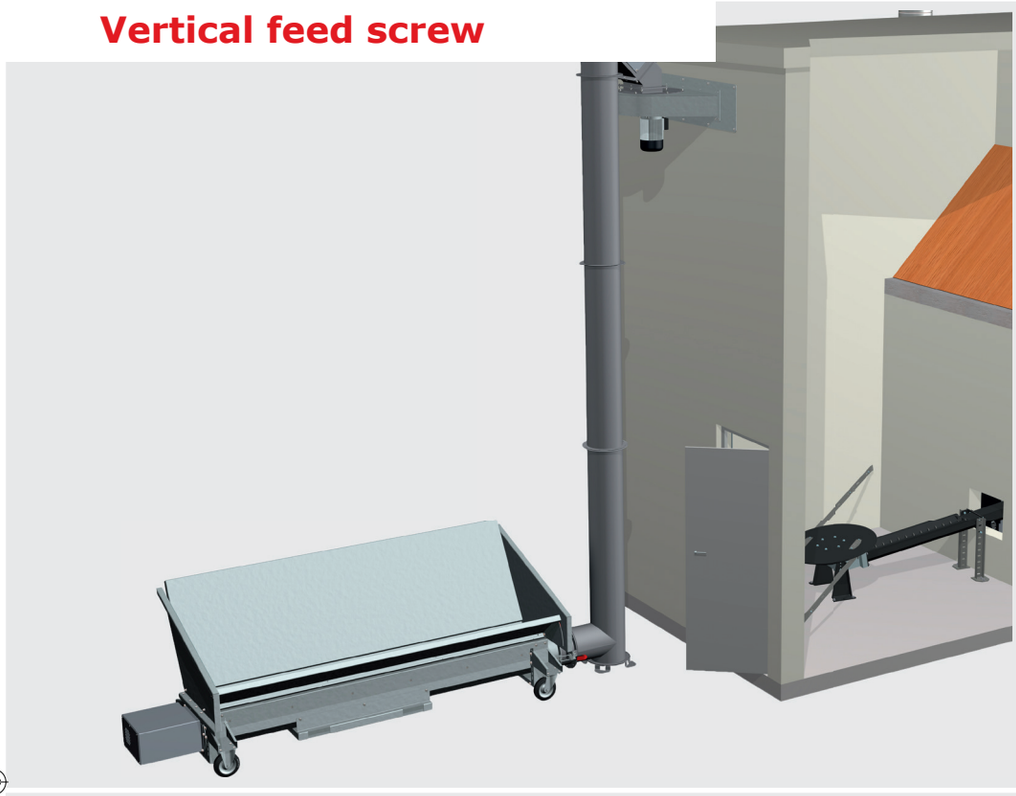

The vertical feed screw sets a new standard for feed output (45 m³/h), operating safety and bunker filling. The tipping gutter pushes the wood chips into the vertical feed system, which transports the fuel to the desired height for the centrifugal disc. Even distribution of the fuel is guaranteed as the vertical feed screw enables dust free filling of the fuel store.

Bunker filling screw

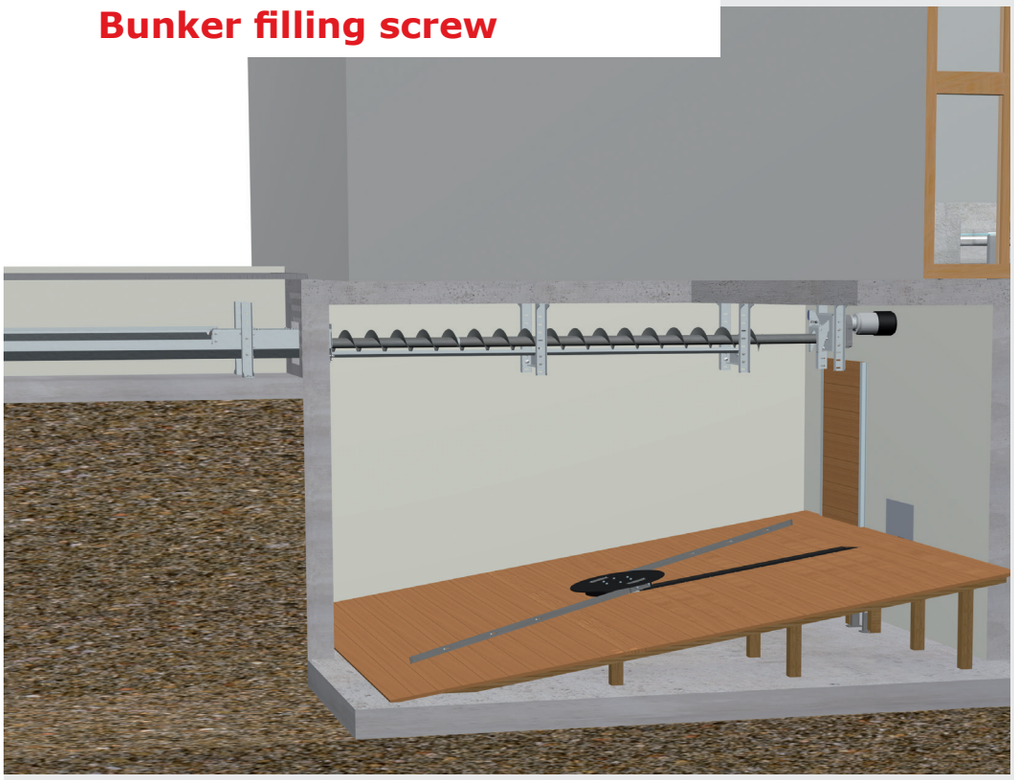

The bunker filling screw transports the fuel reliably into the fuel store and stops automatically when the bunker is full.

The fuel is transported using the bunker filling screw into the store space via the tipping chute which is located outside the store.

Some examples from a wide range of set-up options

Filling at ground level

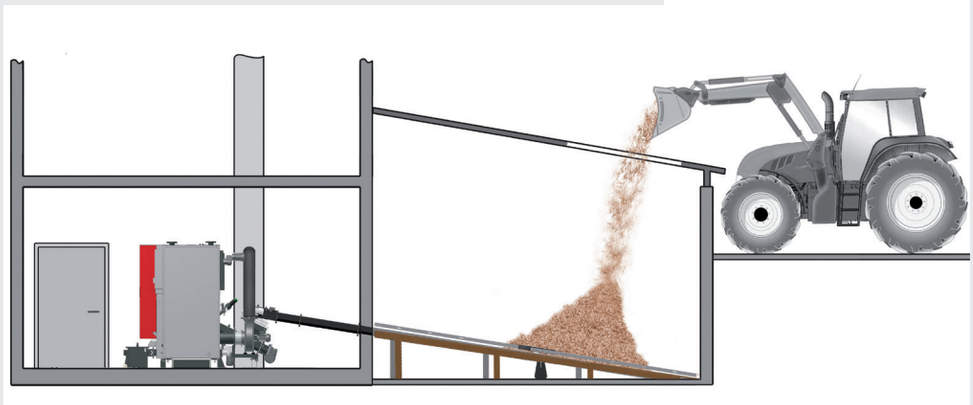

The boiler room is on the same level as the storage room which can be an inexpensive addition.

The fuel store can be filled easily using a front loader or similar through the large store door.

Filling from above

The storage room is outside under the access level. The fuel is tipped into the store from above. It again can be an inexpensive addition.

Filling with a vertical screw

The storage room is above the boiler room. Fuel is fed to the boiler through a downpipe. The use of a rotary valve is highly recommended. The storage room can be filled conveniently using the vertical feed screw or by blowing in the fuel.

Flexible complete solutions

NEW! Froling Energy box

Heating containers make it possible to locate the boiler and fuel storage room wherever you wish. This saves space and enables installation of biomass heating, especially when renovating an existing building. The Froling Energy box is available in two versions (Modular and Individual) and is the ideal container solution for heating with wood chips, pellets and shavings.

While the **Modular** version (made from reinforced concrete) is a standardised design offering an excellent price-performance ratio, the **Individual** version (made from a choice of reinforced concrete or steel) offers solutions for almost any requirement.

The Froling Energy box is an all-in-one complete solution. All components perfectly match each other, including:

- Froling TX wood chip system with discharge system
- Prefabricated reinforced concrete container with all necessary recesses and openings
- Wide range of special accessories (bunker filling systems, layered tank, etc.)

Some examples from a wide range of set-up options

Output up to 250 kW

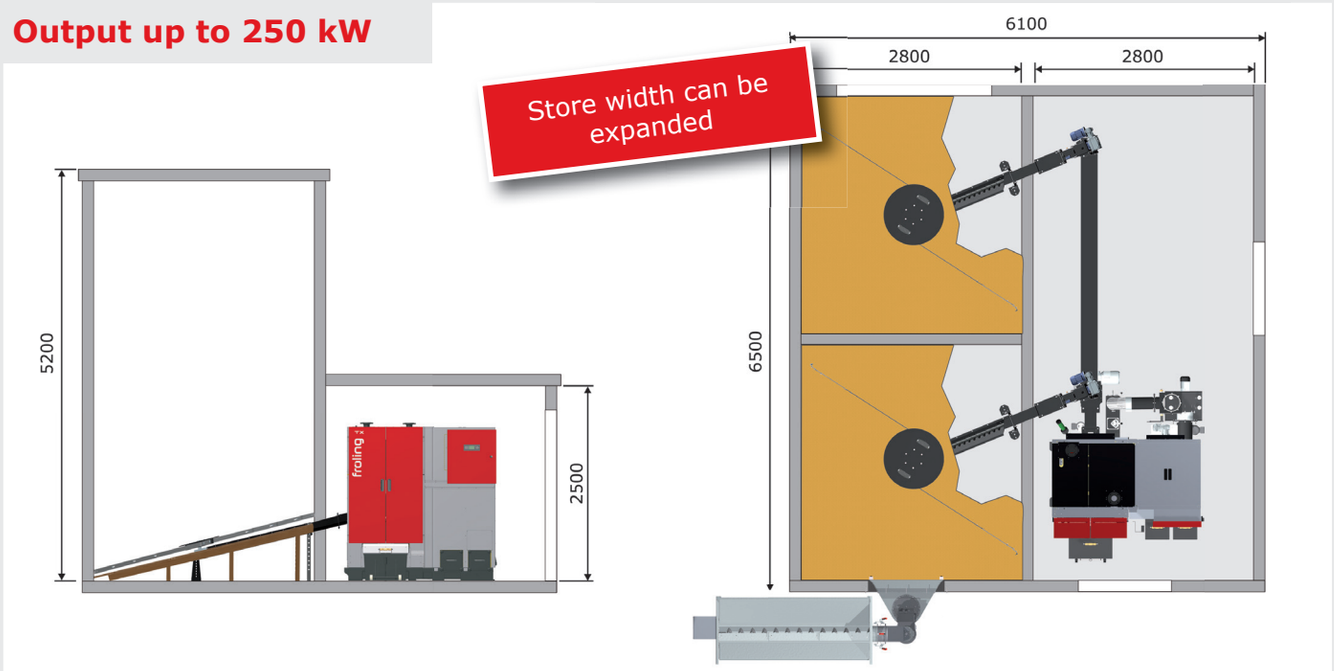

Output up to 500 kW

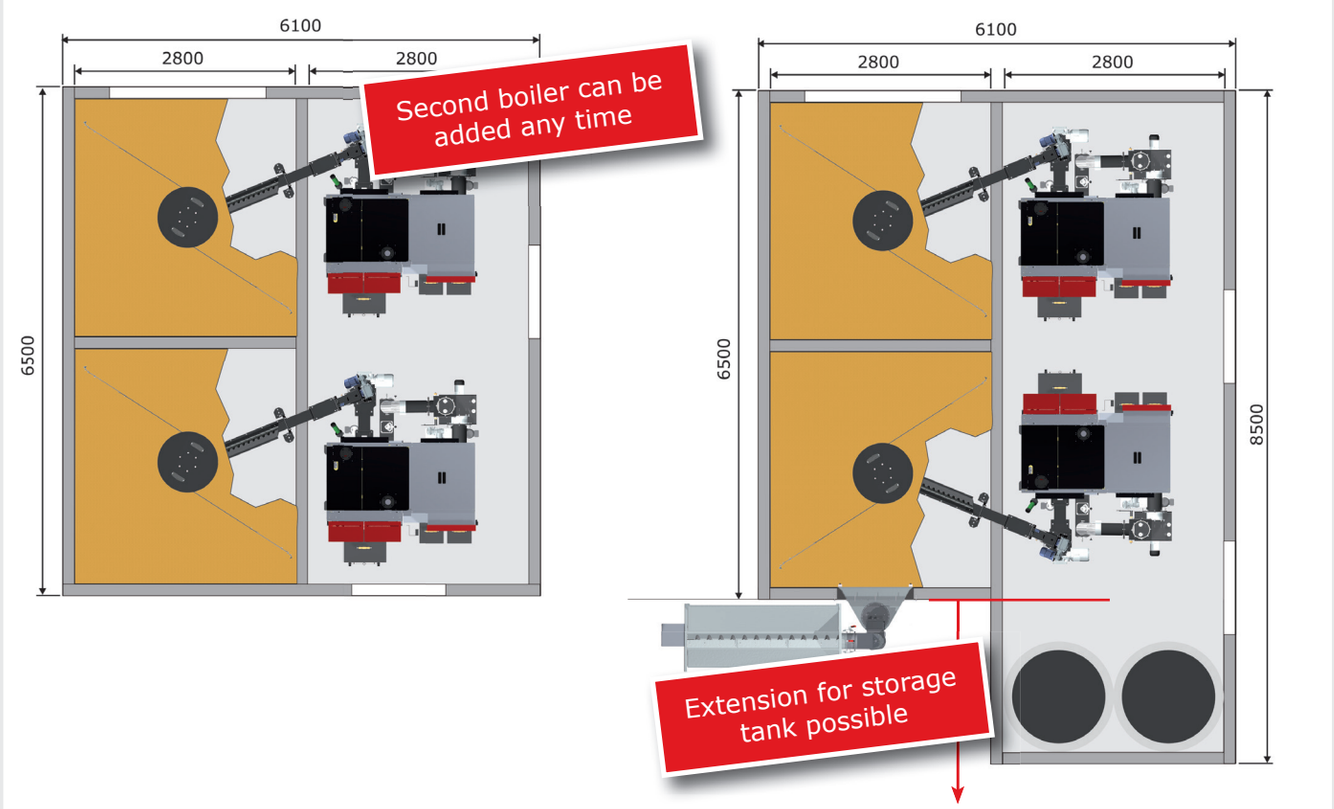

Systematic convenience

Feature: **Lambdatronic H 3200 control**

Advantages:
- Exact combustion control with standard lambda control
- Large, clear control unit
- Menu-driven operation with online help
- Boiler operation directly from the living room

Froling is taking a step into the future with their newly designed H 3200 boiler controller. The control unit is optimised to fit any requirements. The illuminated graphic display ensures that all operating statuses are clearly displayed. The menu structure is ideally organised to ensure easy operation. It is simple to select the important heating and hot water functions using the function keys.

In addition, the unit is pre-wired for easy electrical installation.

The **Froling bus system** makes it possible to install extension modules at any location. The local controls can be installed wherever they are needed: at the boiler, at the heat distributor, at the tank, in the living room or even in the house next door. Additionally, electric cables are kept to a minimum. Only a CAN bus cable is needed to control the room consoles.

For even more convenience you can use the **RBG 3200 room console**. The heating system is conveniently controlled from your living room. The important system data is clearly displayed and changes can be set by pushing a button.

Room console with touch display

The new **RBG 3200 Touch room console** has a modern touchpad interface. The menu structure is intuitive and easy to use. The 4.3" colour screen shows the most important functions at a glance and automatically adjusts the background lighting to the conditions.

NEW: froeling-connect.com online control

Froling's new online control, froeling-connect.com, allows you to check and control your Froling boiler with boiler touch display anytime anywhere. You can read or modify the main status information and settings easily and conveniently online (from your PC, smartphone, tablet PC, etc.). You can also specify which status messages you would like to receive by text message or e-mail. The new froeling-connect.com service allows the owner of the heating system to enable additional users – for example the installer, a neighbour, etc. – to access the boiler and monitor the heating system, during holidays for instance.

System requirements:

- Froling boiler (core module software version V54.04, B05.09) with boiler touch display (software version V60.01, B01.20)
- Broadband internet connection
- Froling boiler internet connection via network
- Web-enabled terminal device (smartphone/tablet PC/laptop/PC) with web browser

Systematic convenience

Feature: **systems engineering for optimum energy consumption**

Advantages:
- complete solution for all requirements
- components work perfectly together
- incorporation of solar power

Froling system engineering enables efficient energy management. Up to 4 storage tanks, 8 hot water tanks, and 18 heating circuits can be incorporated into the heat management system. An additional benefit is the ability to integrate alternative means of energy production, such as solar panels.

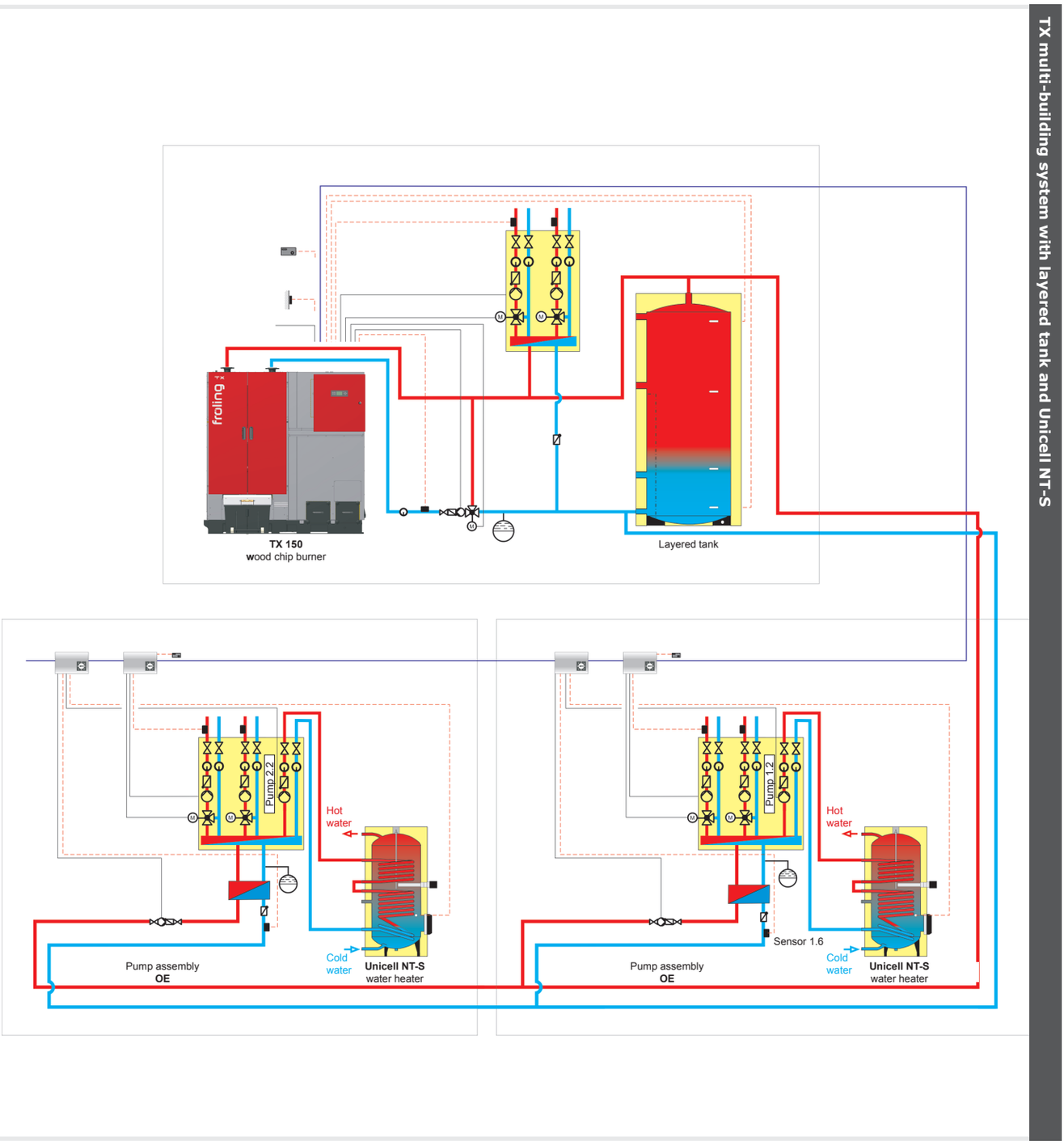

TX multi-building system with layered tank and Unicell NT-S

Calculating fuel requirements

The amount of fuel required depends on the fuel quality. The following rule of thumb can be used for a rough estimate:

Wood chips:

Hard wood P16A/M30 (previously G30/W30):	**2.0 bulk cubic metres per kW heating load**
Soft wood P16A/M30 (previously G30/W30):	**2.5 bulk cubic metres per kW heating load**
Pellets:	**1 m³ per kW heating load**

Annual wood chip requirement in bulk cubic metres

Source: Bayerische Forstverwaltung

E.g. Annual consumption approx. 325,700 kWh
(150 kW TX, 2,000 full load hours, 92.1% efficiency, W30 wood chips [previously W30])

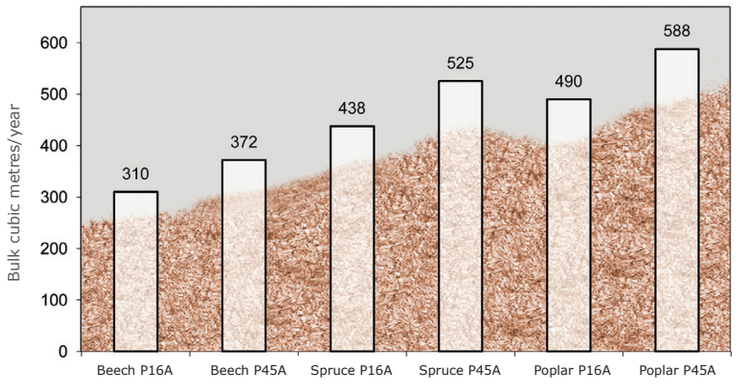

Recommended minimum distances

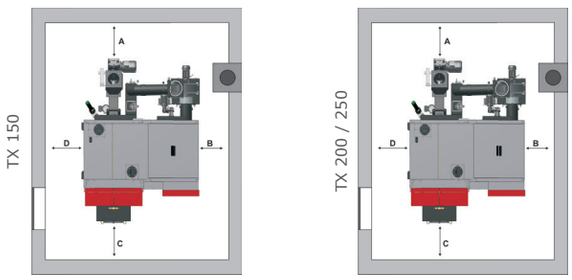

Minimum distances [mm]	TX 150	TX 200	TX 250
A Space requirement for inspection area of fuel feed-in	400	400	400
B Distance from heat exchanger side to wall	300	300	300
C Space requirement for removal of ash box	400	400	400
D Space requirement for inspection area of combustion chamber	400	400	400
Minimum room length	3,420	3,780	3,780
Minimum room width	2,670	2,770	2,770
Minimum room height	2,370	2,370	2,370
Minimum clearance for installation (WxH)	1,000 x 1,950	1,000 x 1,950	1,000 x 1,950

Wood chip fuel specification

P16A wood chips (previously G30)

Length	10 - 30 mm (20% up to 85 mm)
Width	2.5 - 16 mm

P45A wood chips (previously G50)

Length	30 - 50 mm (20% up to 120 mm)
Width	5.6 - 31.5 mm
Water content	max. 35%
Bulk weight	approx. 210 - 250 kg/bulk cubic metres
Energy content	3.5 kWh/kg

Calorific value depending on water content and moisture

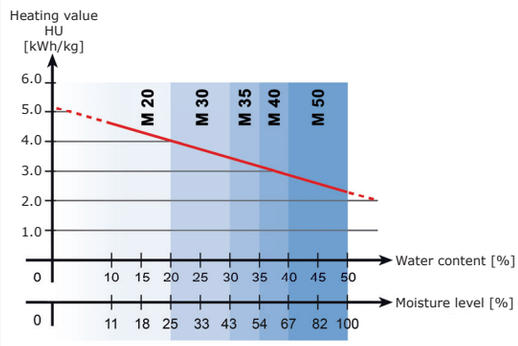

Pellets fuel specification

Length	5 - 30 mm (20% up to 45 mm)
Diameter	6 mm
Water content	max. 10%
Bulk weight	approx. 650 kg/m³
Ash content	max. 0.5%
Dust content	max. 2.3%
Energy content	4.9 kWh/kg

Technical specifications

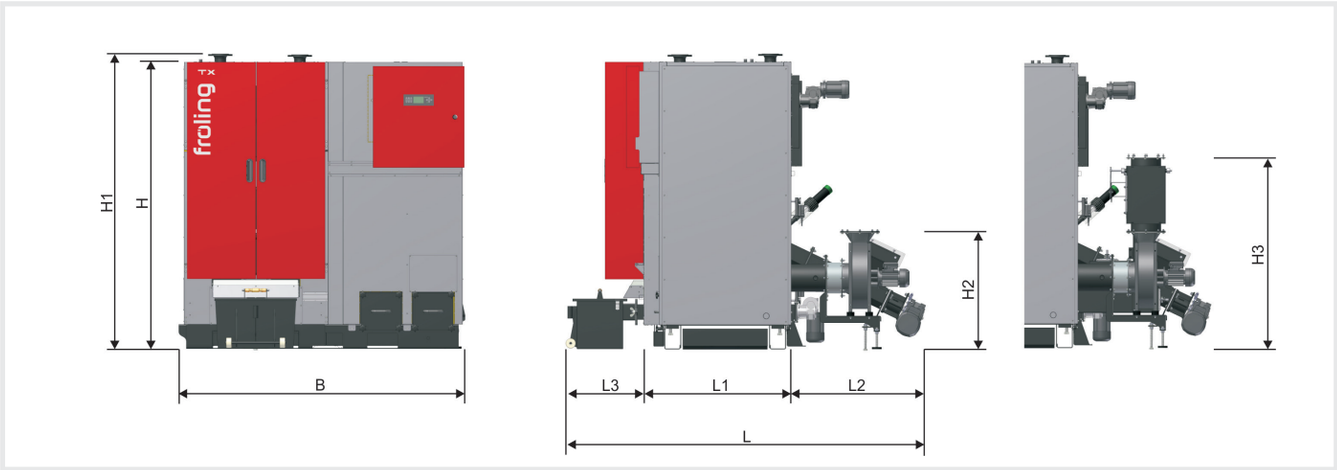

DIMENSIONS - TX		150	200	250
H Height of boiler	[mm]	1,880	1,880	1,880
H1 Height of flow connection/return connection	[mm]	1,935	1,935	1,935
H2 Height of flue gas pipe connection without FGR	[mm]	770	960	960
H3 Height of flue gas pipe connection incl. FGR	[mm]	1,410	1,445	1,445
W Width of boiler	[mm]	1,970	2,070	2,070
L Total length of system	[mm]	2,620	2,980	2,980
L1 Length, combustion chamber	[mm]	1,090	1,400	1,400
L2 Length of stoker unit	[mm]	940	970	970
L3 Length of ash container	[mm]	590	610	610

TECHNICAL SPECIFICATIONS - TX		150	200	250
Nominal heat output (M30 wood chips as per ÖNORM)	[kW]	150	199	250
Required fuel consumption at nominal load (P45A/M30)	[kg/h]	48	61	61
Flue gas pipe diameter	[mm]	200	250	250
Power connection	[V / Hz / A]	400 V / 50 Hz / 35 A		
Dry weight including attachments	[kg]	2,730	3,380	3,400
Weight, combustion chamber	[kg]	855	1,120	1,120
Weight, heat exchanger	[kg]	1,000	1,280	1,280
Water capacity	[l]	440	570	570
Permitted operating temperature	[°C]	90	90	90
Minimum return temperature	[°C]	65	65	65
Permitted operating pressure	[bar]	3	3	3
Flue gas temperature at nominal load	[°C]	150	150	150
Boiler efficiency	[%]	92.1	92.9	93.7

Your Froling partner:

P0350214 - All illustrations intended as a guide only. We reserve the right to make technical changes without prior notice. Errors and omissions excepted.
Sources for external image material: www.propellets.at, www.aboutpixel.de

Heizkessel- und Behälterbau GesmbH
A-4710 Grieskirchen, Industriestr. 12
AUT: Tel. +43 (0) 7248 606 • Fax +43 (0) 7248 606-600
GER: Tel. +49 (0) 89 927 926-0 • Fax +49 (0) 89 927 926-219
E-mail: info@froeling.com • Internet: www.froeling.com